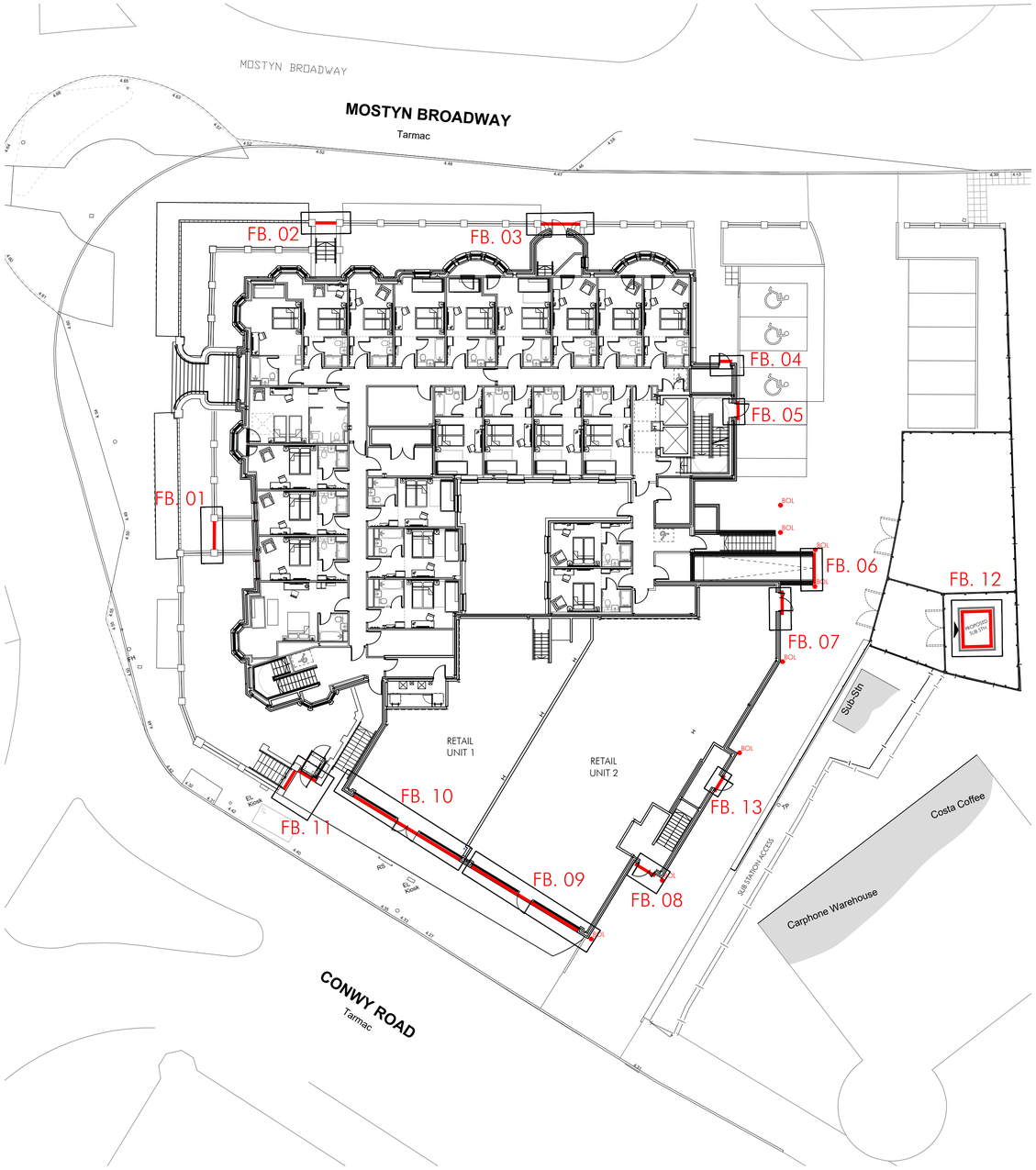

GROUND FLOOR PLAN
FLOOD MANAGEMENT LOCATIONS
SCALE 1:200

DENOTES POSITION OF DEMOUNTABLE FLOOD DEFENCES.

FLOOD BARRIER SCHEDULE

BARRIER	FIXING DETAIL	HEIGHT
FB.01	1	600mm
FB.02	2	600mm
FB.03	3	600mm
FB.04	4	900mm
FB.05	4	900mm
FB.06	5	900mm
FB.07	6	900mm
FB.08	7	600mm
FB.09	8	600mm
FB.10	8	600mm
FB.11	9	600mm
FB.12	10	600mm
FB.13	4.5	900mm

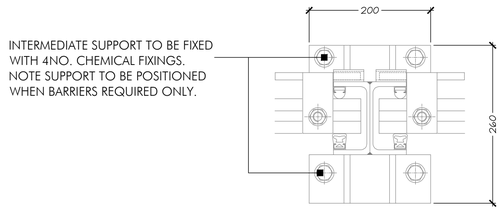

DETAIL 1
INTERMEDIATE SUPPORT 1:5

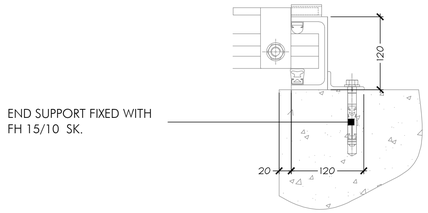

DETAIL 2
SURFACE MOUNT END SUPPORT FIXING 1:5

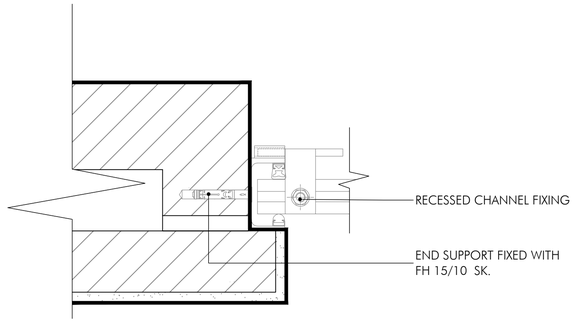

DETAIL 3
RECESSED END SUPPORT FIXING

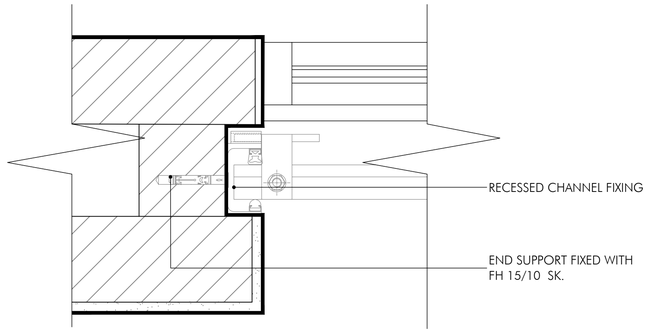

DETAIL 4
RECESSED END SUPPORT FIXING
SHOP FRONT

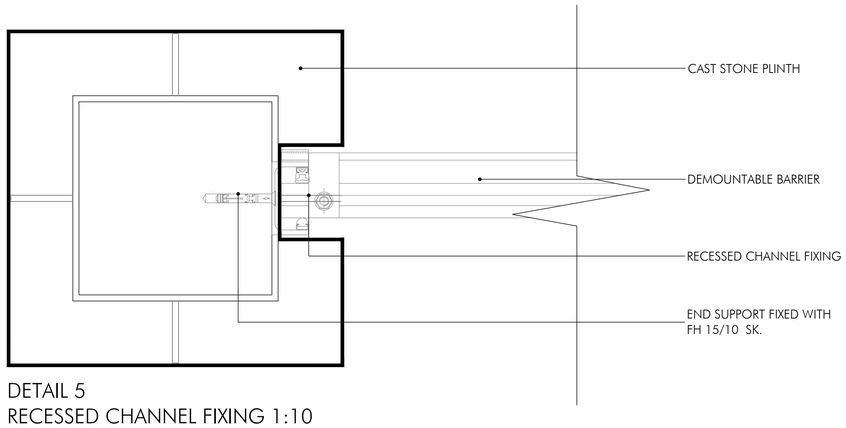

DETAIL 5
RECESSED CHANNEL FIXING 1:10

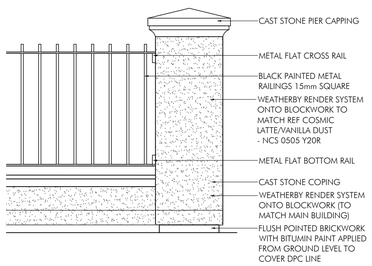

TYPICAL DETAIL OF RESILIANT WALLS
SURROUNDING EXISTING LIGHT WELLS
SCALE 1:20

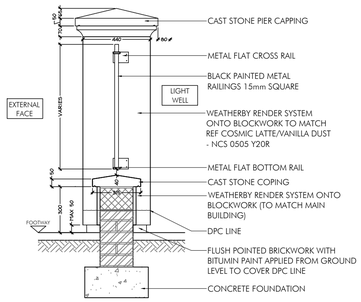

TYPICAL DETAIL OF RESILIANT WALLS
SURROUNDING EXISTING LIGHT WELLS SECTION
SCALE 1:20

DRAWN	REVISION	DATE	VER
AM	REV A- PLAN & BOUNDARY WALL UPDATED	18.08.20	
RDM	DRAWN	24.05.17	

PLANNING ISSUE

ALLISON PIKE
ARCHITECTS & DESIGNERS

7 Buxton Road West, Disley,
Stockport, Cheshire, SK12 2AE.
Website: www.allisonpike.com

Telephone: 01663 763000
Facsimile: 01663 766772
Email: studio@allisonpike.com

© Allison Pike Partnership Limited.

PROJECT
TUNDO CASTLE
LLANDUDNO

TITLE
FLOOD MANAGEMENT MEASURES

SCALE
1:10 & 1:200 @ A1

JOB No	DRAWING No	REV
BAK01	AP22	A